PS30SW II

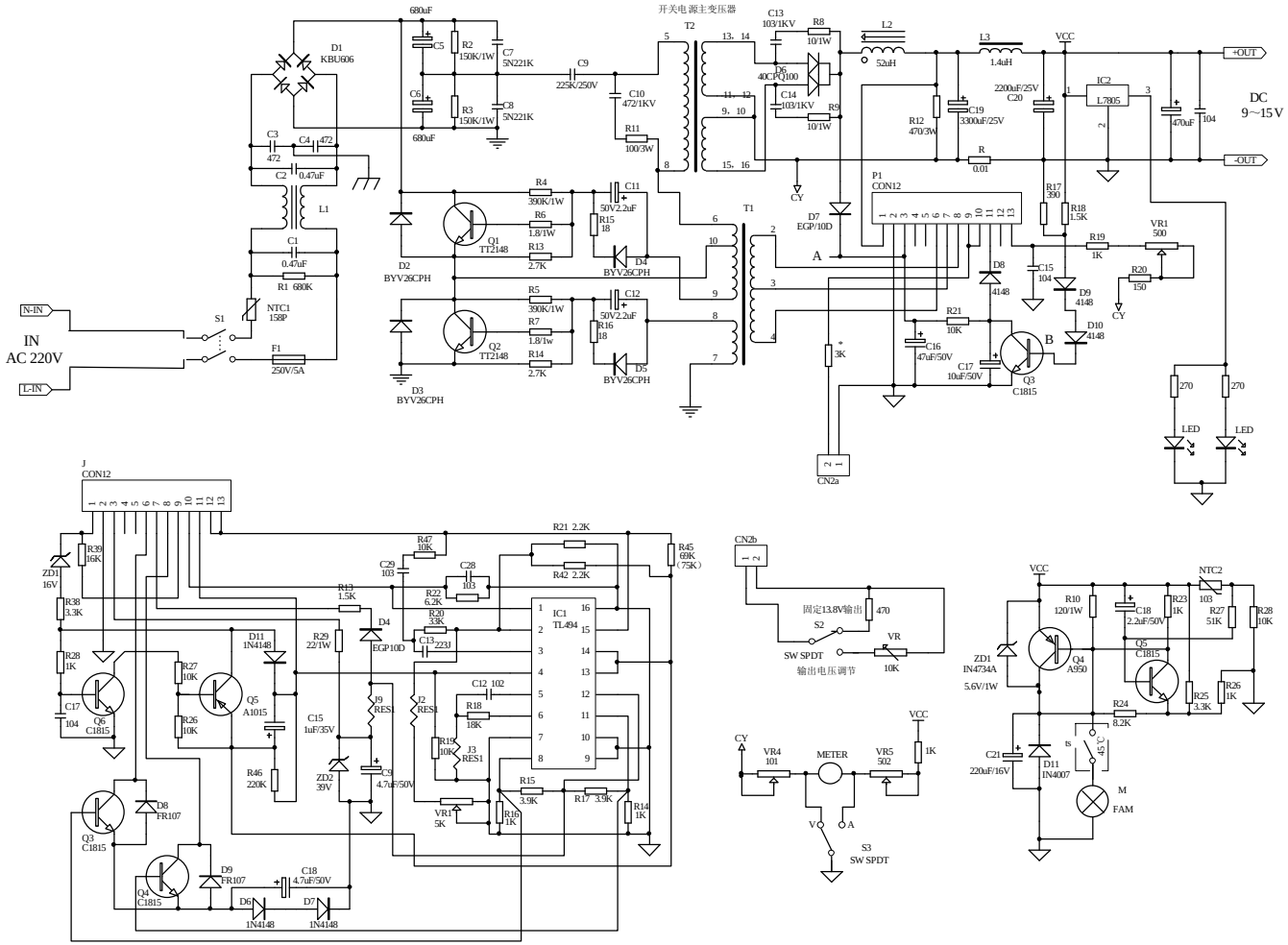

Title		
Size A3	Number	Revision
Date: 13-Apr-2010		Sheet of
File: E:\jgQJ系列产品\9-15V30A开关电源\9-15V30A开关电源.Ddb		